fienza

KAYA WALL SET - LEVER TAPS - 130MM - GUN METAL

Code	344102GM-130-LF
Colour	Gun Metal
Material	Lead Free Brass & Stainless Steel
Install Type	Wall Mounted

Details

- PVD gun metal finish
- Designed for basin and bath
- Fixed position outlet
- Includes pre-fitted basin aerator and free-flow aerator
- Push-fit spout and screw-fit spigot installation
- Contra-rotating outward taps with concealed backplates
- 1/4 turn ceramic discs
- Spindles included
- Made from lead-free brass*

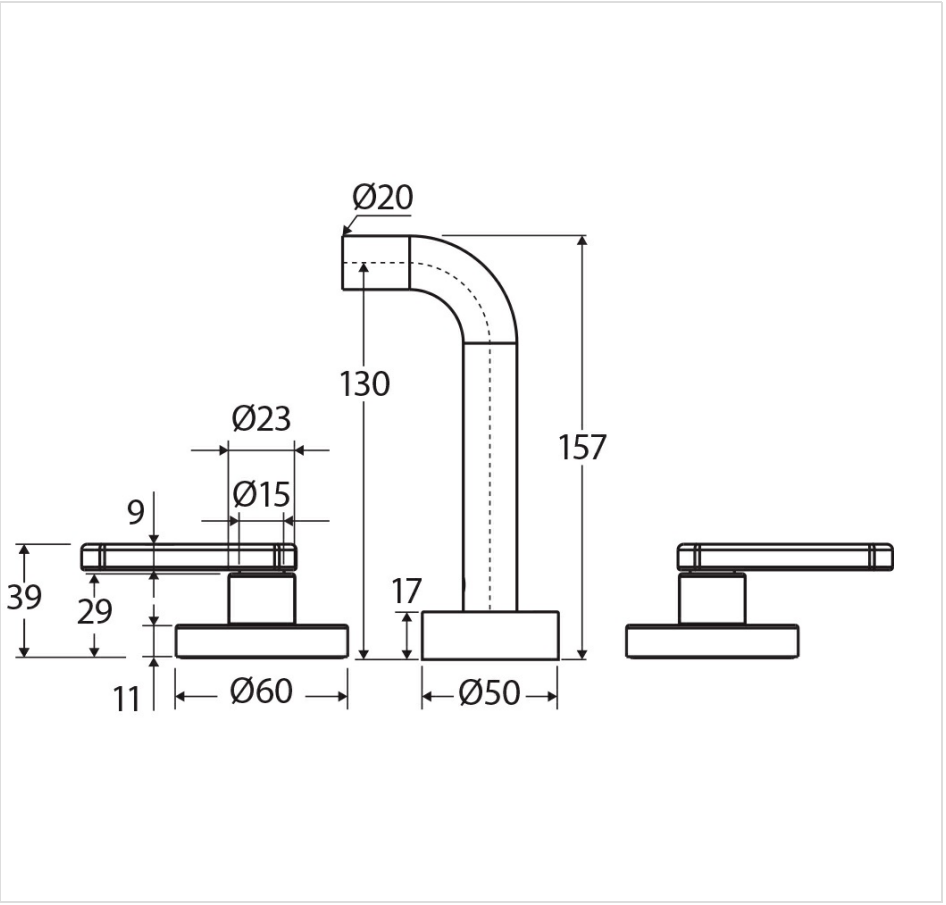



Product/Installation Notes

This product may have a visible Fienza or WaterMark logo.

Specifications

Overall Size	50 mm (L) × 157 mm (W) × 60 mm (H)
Weight	
Warranty	Visit: **fienza.com.au/warranty** for more details
WELS Registration	Pending WELS Registration
WELS Flow Rating	5 Stars rated, 5.5L/min when installed over basin

We aim to ensure that specifications are correct at the time of publication. All measurements are shown in millimetres. Always use measurements of actual product received for final specification as the technical drawing may contain differences. Please note this product may have a visible printed FIENZA or Watermark logo. Due to printing limitations, physical colour may vary from the image shown. FIENZA reserves the right to make modifications without prior notice.