fienza

AXLE INDUSTRIAL COVER PLATE FOR KAYA GOOSENECK ARM SHOWER - BRUSHED NICKEL

Code	422122BN
Colour	Brushed Nickel
Material	Stainless Steel
Install Type	Wall Mounted

Details

- Unique industrial cross-hatched accent
- Cover plate only to suit all KAYA Gooseneck Arm Shower Sets (does not include arm piece)
- PVD brushed nickel finish
- Fully concealed fixings

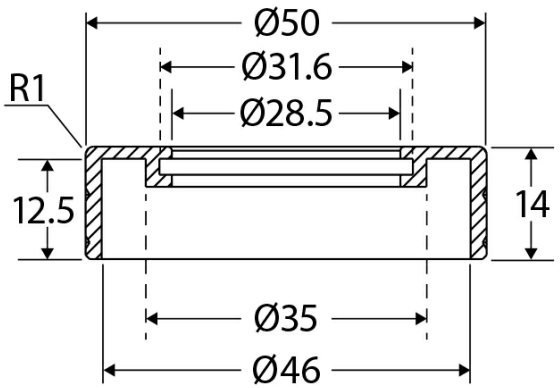



We aim to ensure that specifications are correct at the time of publication. All measurements are shown in millimetres. Always use measurements of actual product received for final specification as the technical drawing may contain differences. Please note this product may have a visible printed FIENZA or Watermark logo. Due to printing limitations, physical colour may vary from the image shown. FIENZA reserves the right to make modifications without prior notice.

Specifications

Overall Size	
Weight	
Warranty	Visit: **fienza.com.au/warranty** for more details
WELS Registration	N/A
WELS Flow Rating	N/A