fienza

AXLE WALL BASIN/BATH MIXER DRESS KIT - ROUND PLATES - 160MM SPOUT - BRUSHED NICKEL

Code	D231104BN-LF
Colour	Brushed Nickel
Material	Lead Free Brass
Install Type	Wall Mounted

Details

- Unique industrial cross-hatched handle and spout
- Designed for basin and bath
- PVD brushed nickel finish
- Free flow aerator included for bath installation
- Made from solid brass
- High quality European cartridge (35mm)

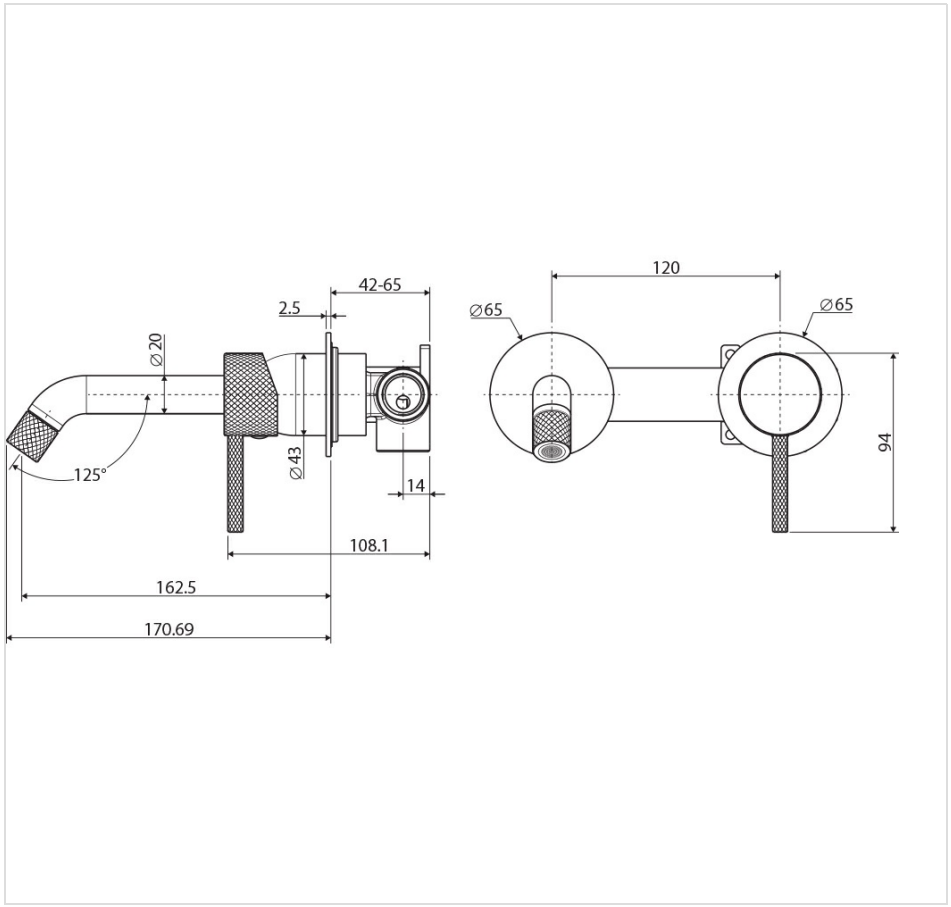



Specifications

Overall Size	120 mm (L) × 170.69 mm (W) × 94 mm (H)
Weight	0.58 kg
Warranty	Visit: **fienza.com.au/warranty** for more details
WELS Registration	N/A
WELS Flow Rating	N/A

Product/Installation Notes

This product may have a visible Fienza or Watermark logo.

We aim to ensure that specifications are correct at the time of publication. All measurements are shown in millimetres. Always use measurements of actual product received for final specification as the technical drawing may contain differences. Please note this product may have a visible printed FIENZA or Watermark logo. Due to printing limitations, physical colour may vary from the image shown. FIENZA reserves the right to make modifications without prior notice.