fienza

CARE FOLDING SHOWER SEAT - MATTE BLACK BASE - SATIN BLACK SEAT

Code	FAL006B
Colour	Satin Black
Material	Urea-formaldehyde & Stainless Steel
Install Type	Wall Mounted

Details

- Designed for independent living and aged care
- Sleek and modern ergonomic design
- Wall mounted
- Folds up against the wall to save space
- Made from UF with soft close hinges

Please note: These products may have a visible Fienza logo marking.

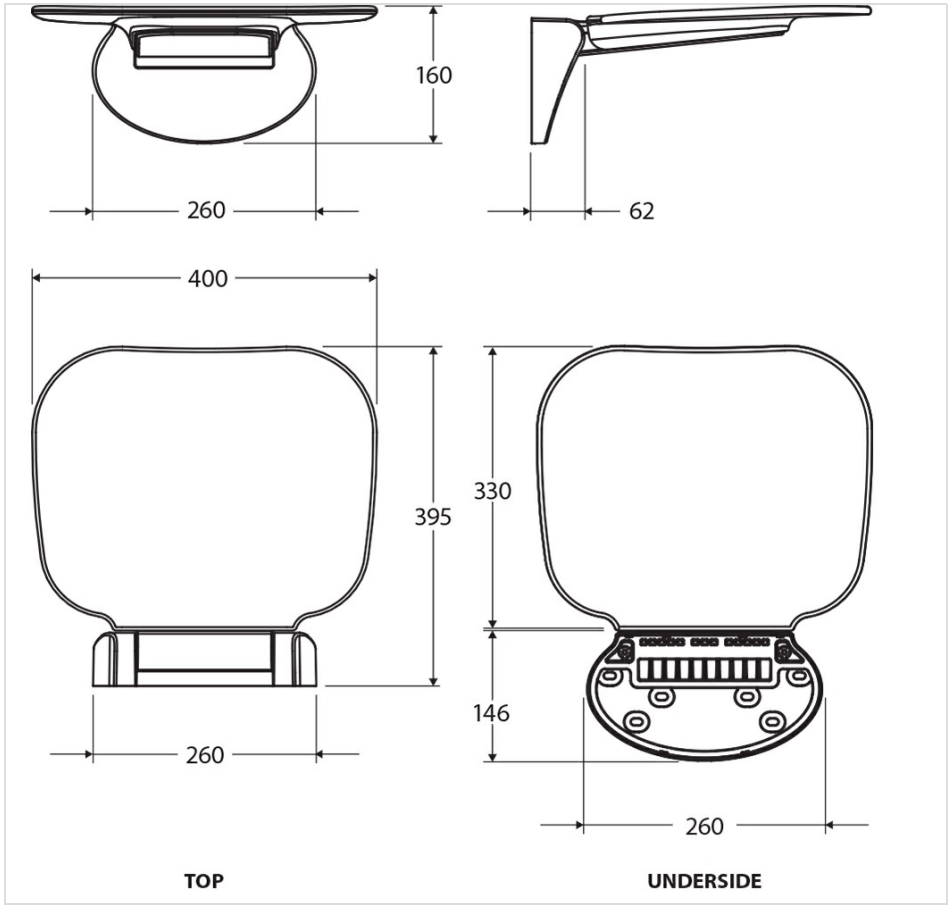



Product/Installation Notes

Suitable support must be included behind the wall for fixing bolts; Maximum load rating: 15 kg

Specifications

Overall Size	400 mm (L) × 330 mm (W) × 395 mm (H)
Weight	4.13 kg
Warranty	Visit: **fienza.com.au/warranty** for more details
WELS Registration	N/A
WELS Flow Rating	N/A

We aim to ensure that specifications are correct at the time of publication. All measurements are shown in millimetres. Always use measurements of actual product received for final specification as the technical drawing may contain differences. Please note this product may have a visible printed FIENZA or Watermark logo. Due to printing limitations, physical colour may vary from the image shown. FIENZA reserves the right to make modifications without prior notice.