ACCESSIBLE CARE SLIMLINE HAND GRAB RAIL - 450MM - STAINLESS STEEL

Code	FC45
Colour	Brushed Stainless Steel
Material	304 Stainless Steel
Install Type	Wall Mounted

Details

- Soft square bracket design
- Manufactured to comply with relevant grab rail requirements for AS 1428.1:2021 Access and Mobility
- Constructed to withstand above 1470N (over 150 kg) force as per requirements
- Concealed fixings
- Wall mounting screws included
- Made from 304 stainless steel

Please note: These products may have a visible Fienza logo marking.

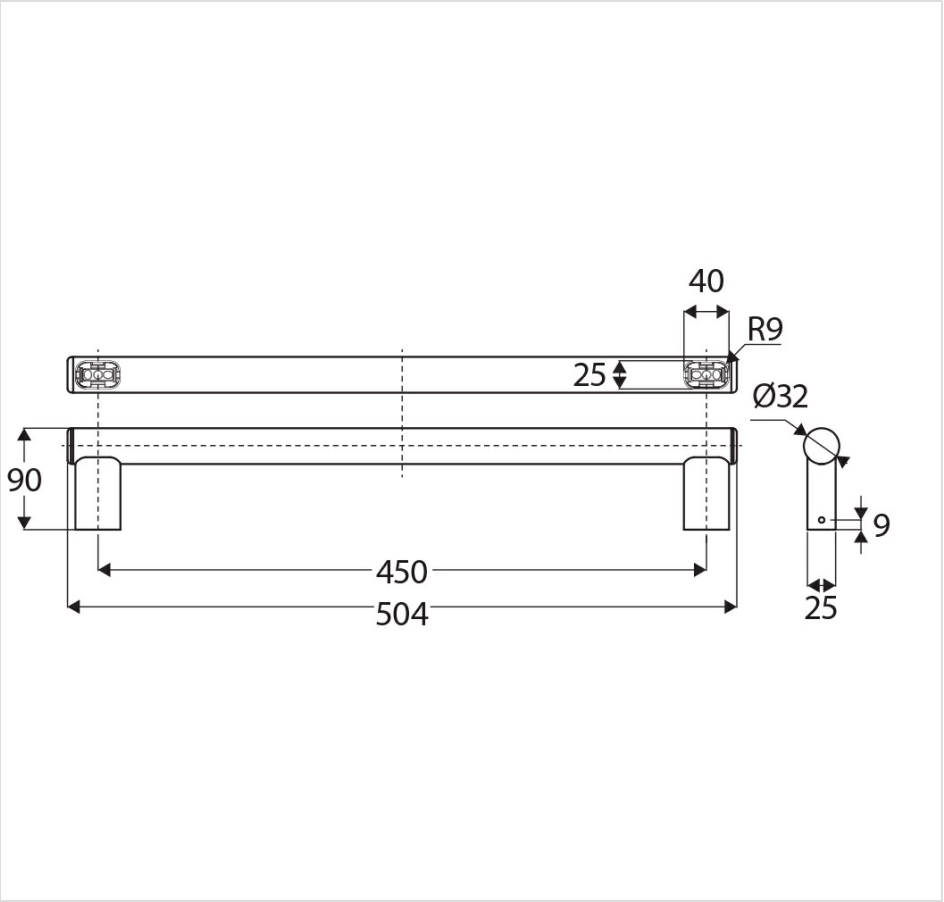



Product/Installation Notes

Suitable support must be included behind the wall for fixing bolts

Specifications

Overall Size	504 mm (L) × 90 mm (W) × 25 mm (H)
Weight	0.95 kg
Warranty	Visit: **fienza.com.au/warranty** for more details
WELS Registration	N/A
WELS Flow Rating	N/A

We aim to ensure that specifications are correct at the time of publication. All measurements are shown in millimetres. Always use measurements of actual product received for final specification as the technical drawing may contain differences. Please note this product may have a visible printed FIENZA or Watermark logo. Due to printing limitations, physical colour may vary from the image shown. FIENZA reserves the right to make modifications without prior notice.