CLAWFOOT FREESTANDING GLOSS WHITE ACRYLIC BATH - 1700MM - URBAN BRASS FEET

Code	FR26-1700UB-OF
Colour	Urban Brass
Material	Acrylic
Install Type	Freestanding

Details

- Gloss white with urban brass lion claw feet
- Freestanding style
- Traditional slipper shape with a rolled top edge
- Made from UV stabilised, premium sanitary-grade acrylic with Lucite MMA
- Built-in overflow
- Requires 40mm overflow waste (not included)

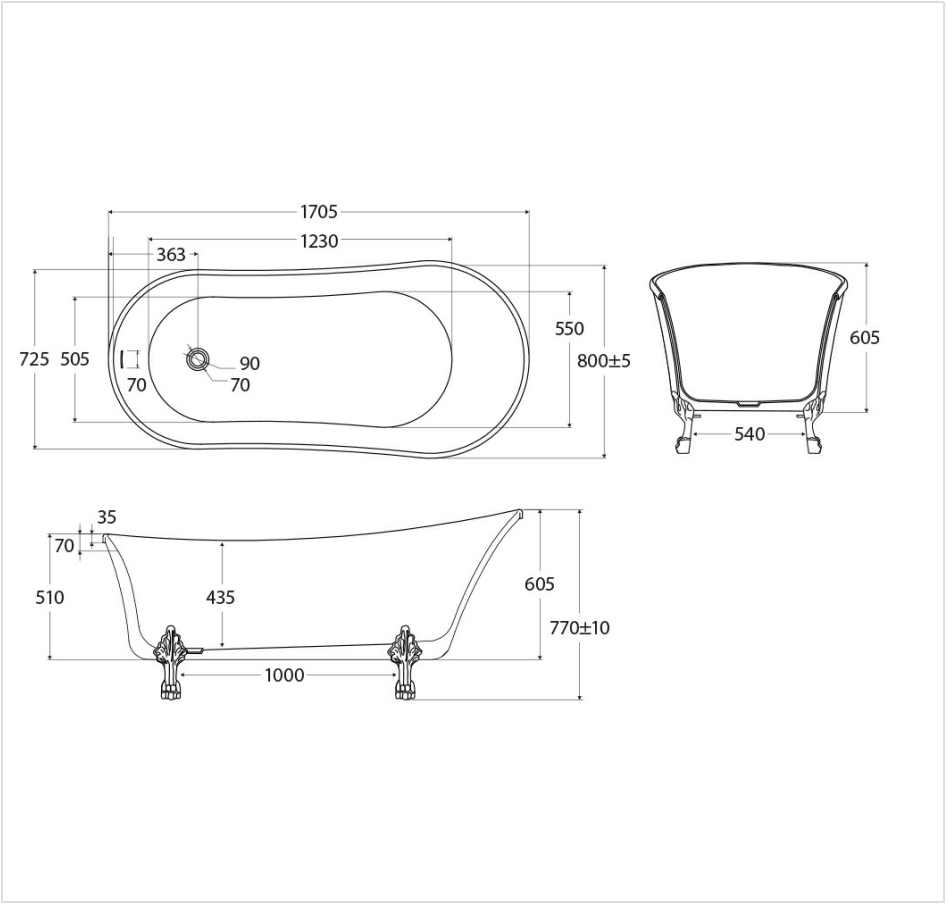



Product/Installation Notes

Installation Warning - Floor preparation may be required for off-centre waste positions. Please discuss with your builder/plumber before tiling and waterproofing your bathroom.

Specifications

Overall Size	1705 mm (L) × 800 mm (W) × 770 mm (H)
Weight	52 kg
Warranty	Visit: **fienza.com.au/warranty** for more details
WELS Registration	N/A
WELS Flow Rating	N/A

We aim to ensure that specifications are correct at the time of publication. All measurements are shown in millimetres. Always use measurements of actual product received for final specification as the technical drawing may contain differences. Please note this product may have a visible printed FIENZA or Watermark logo. Due to printing limitations, physical colour may vary from the image shown. FIENZA reserves the right to make modifications without prior notice.