KOKO WALL FACED TOILET SUITE - GLOSS WHITE - STANDARD SEAT - S TRAP - VIEGA V-01 IN-WALL CISTERN

Code	K002376A-V1
Colour	Gloss White
Material	Vitreous China (Pan & Cistern) and Urea-formaldehyde (Seat)
Install Type	Wall Faced

Details

- Gloss white finish
- Tornado rimless ultra quiet flush
- Concealed pan for easy cleaning
- UF quick release, soft close seat
- Can be installed as P-Trap or S-Trap
- Stainless steel hinges
- Floor mounting screws included
- Cistern and flush buttons required (sold separately)

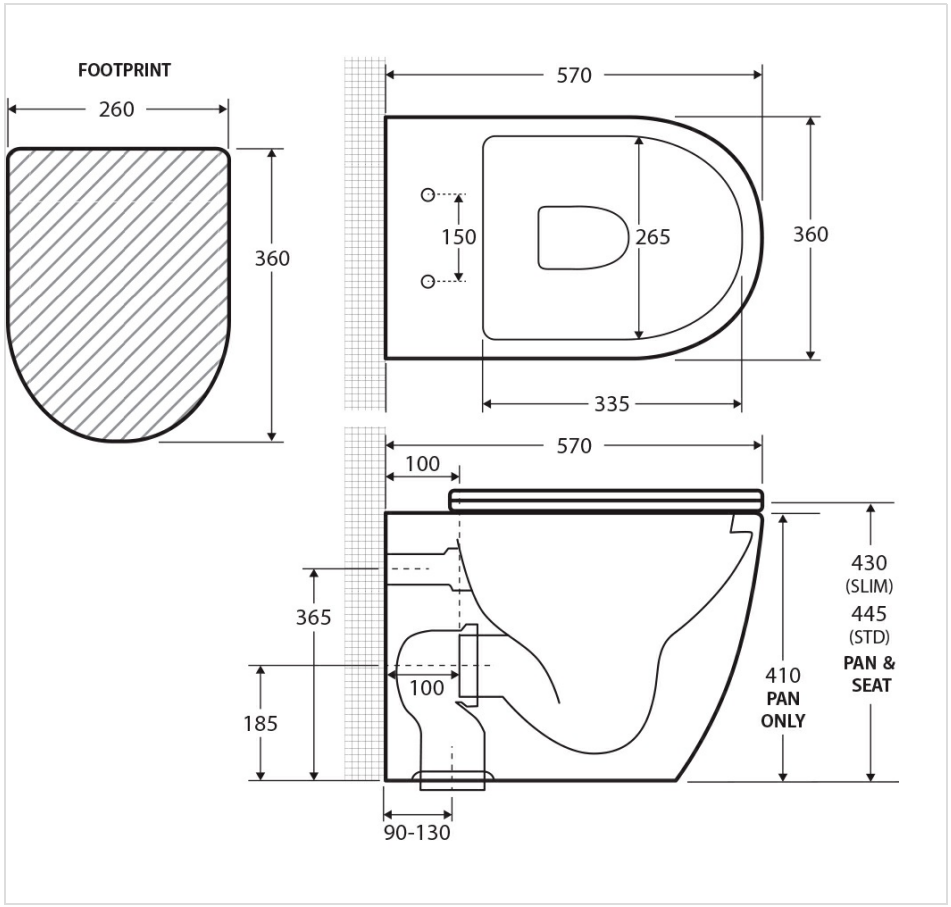



Product/Installation Notes

For ceramic products, please allow +/- 10mm tolerance for manufacturing variances.

Specifications

Overall Size	360 mm (L) × 570 mm (W) × 445 mm (H)
Weight	
Warranty	Visit: **fienza.com.au/warranty** for more details
WELS Registration	L08018
WELS Flow Rating	4 Star - 4.6L/3L (3.3L avg/flush)

We aim to ensure that specifications are correct at the time of publication. All measurements are shown in millimetres. Always use measurements of actual product received for final specification as the technical drawing may contain differences. Please note this product may have a visible printed FIENZA or Watermark logo. Due to printing limitations, physical colour may vary from the image shown. FIENZA reserves the right to make modifications without prior notice.