fienza

ALIX BACK-TO-WALL TOILET SUITE - GREY SEAT - S TRAP 160-210 - R&T CISTERN

Code	K011GB
Colour	Gloss White
Material	Vitreous China (Pan & Cistern) and Urea-formaldehyde (Seat)
Install Type	Back to Wall

Details

- Tornado rimless ultra quiet flush
- Gloss white finish
- Extra height pan
- Short projection from wall for tight spaces
- Large, easy-push chrome flush buttons
- Concealed pan for easy cleaning
- UF quick release, soft close seat
- High quality R&T flush system
- Top or bottom inlets: left top inlet; left or right bottom inlet
- Can be installed to comply with Ambulant AS1428.1

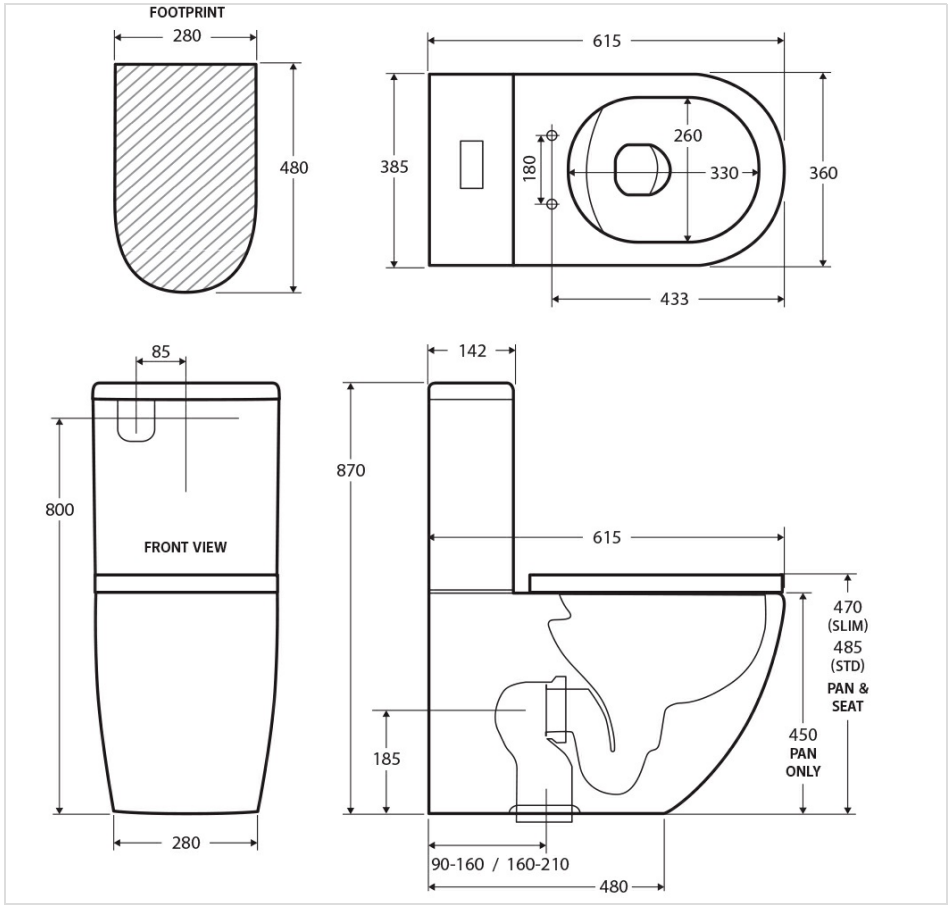



Specifications

Overall Size	385 mm (L) × 615 mm (W) × 870 mm (H)
Weight	
Warranty	Visit: **fienza.com.au/warranty** for more details
WELS Registration	L06202
WELS Flow Rating	4 Star - 4.5L/3L (3.3L avg/flush)

Product/Installation Notes

For ceramic products, please allow +/- 10mm tolerance for manufacturing variances.

We aim to ensure that specifications are correct at the time of publication. All measurements are shown in millimetres. Always use measurements of actual product received for final specification as the technical drawing may contain differences. Please note this product may have a visible printed FIENZA or Watermark logo. Due to printing limitations, physical colour may vary from the image shown. FIENZA reserves the right to make modifications without prior notice.