ISABELLA CARE WALL-FACED TOILET SUITE - WHITE SEAT - S TRAP - R&T IN-WALL CISTERN - CHROME FLUSH BUTTONS

Code	K016WA-RT
Colour	Gloss White
Material	Vitreous China (Pan & Cistern) and Urea-formaldehyde (Seat)
Install Type	Wall Faced

Details

- Gloss white pan
- Single flap seat
- Rimless hygienic flush
- Can install for AS 1428.1:2021 Accessible compliance

Please note: Cistern and flush buttons required (sold separately)

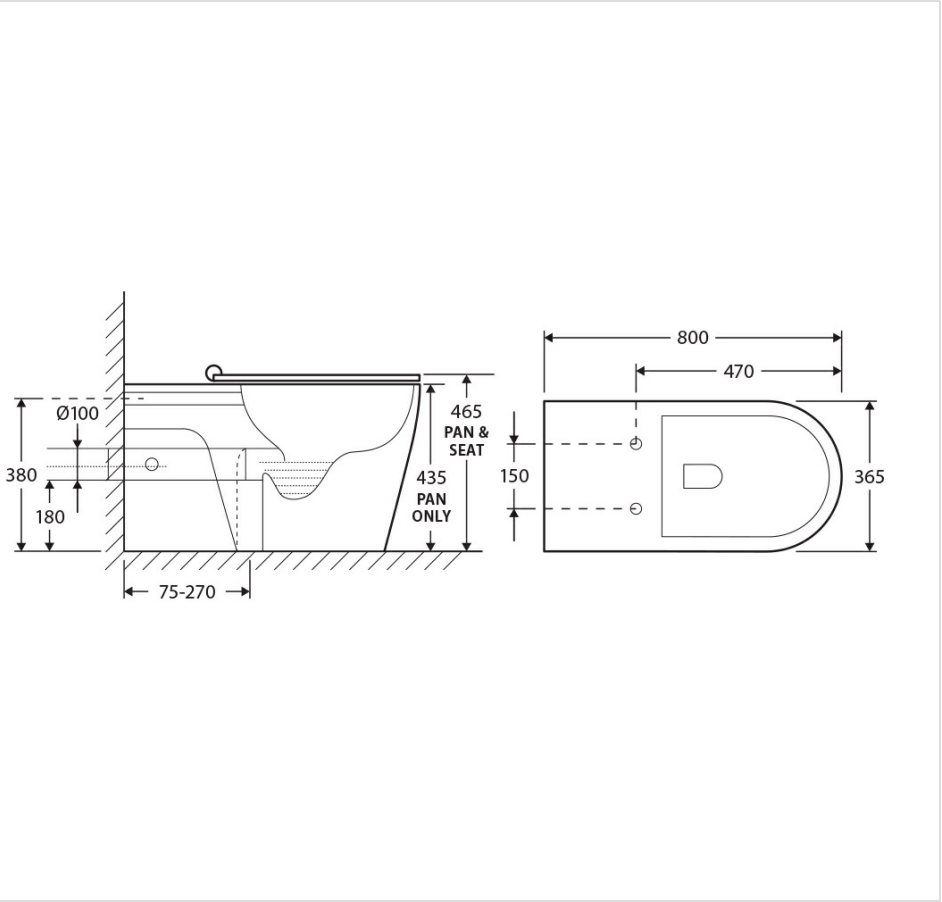



Specifications

Overall Size	365 mm (L) × 800 mm (W) × 465 mm (H)
Weight	
Warranty	Visit: **fienza.com.au/warranty** for more details
WELS Registration	L06953
WELS Flow Rating	4 Star - 4.4L/3L (3.3L avg/flush)

Product/Installation Notes

For ceramic products, please allow +/- 10mm tolerance for manufacturing variances.

We aim to ensure that specifications are correct at the time of publication. All measurements are shown in millimetres. Always use measurements of actual product received for final specification as the technical drawing may contain differences. Please note this product may have a visible printed FIENZA or Watermark logo. Due to printing limitations, physical colour may vary from the image shown. FIENZA reserves the right to make modifications without prior notice.