ALIX WALL FACED TOILET SUITE - STANDARD SEAT - S TRAP - PAN & SEAT ONLY NO CISTERN

Code	K025A-PS
Colour	Gloss White
Material	Vitreous China (Pan & Cistern) and Urea-formaldehyde (Seat)
Install Type	Wall Faced

Details

- Can be installed for AS1428.1 Ambulant compliance
- Gloss white finish
- Rimless hygienic flush
- Extra height pan
- Concealed pan for easy cleaning
- UF quick release, soft close seat
- Stainless steel hinges
- Floor mounting screws included

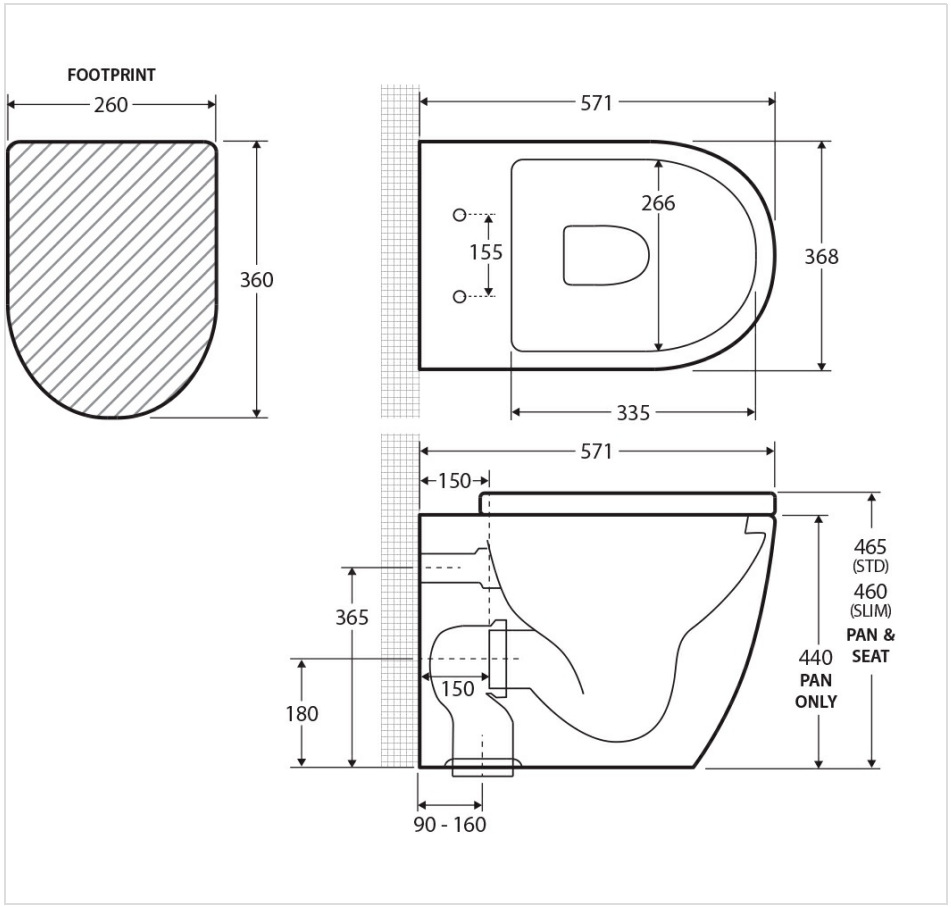



Product/Installation Notes

For ceramic products, please allow +/- 10mm tolerance for manufacturing variances.

Specifications

Overall Size	368 mm (L) × 571 mm (W) × 465 mm (H)
Weight	
Warranty	Visit: **fienza.com.au/warranty** for more details
WELS Registration	L07572
WELS Flow Rating	4 Star - 4.6L/3L (3.4L avg/flush)

We aim to ensure that specifications are correct at the time of publication. All measurements are shown in millimetres. Always use measurements of actual product received for final specification as the technical drawing may contain differences. Please note this product may have a visible printed FIENZA or Watermark logo. Due to printing limitations, physical colour may vary from the image shown. FIENZA reserves the right to make modifications without prior notice.