# KOKO WALL HUNG TOILET SUITE - GLOSS WHITE - SLIM SEAT - VIEGA V-02 IN-WALL CISTERN

| | |
|---|---|
| **Code** | K2376W-V2-2 |
| **Colour** | Gloss White |
| **Material** | Vitreous China (Pan & Cistern) and Urea-formaldehyde (Seat) |
| **Install Type** | Wall Hung |

## Details

- Gloss white finish
- Tornado rimless ultra quiet flush
- UF quick release, soft close seat
- Concealed design (includes mounting screws)
- Stainless steel hinges
- P-Trap only

**Note:** Cistern and flush buttons required (sold separately).

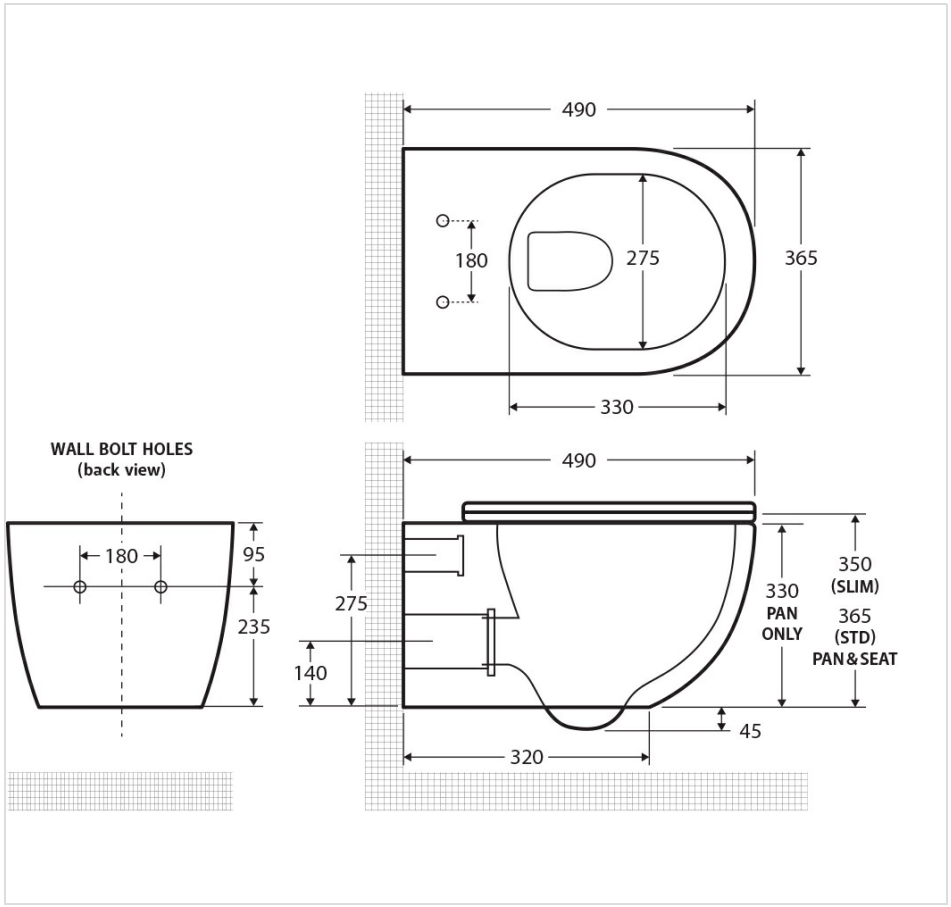





## Specifications

| | |
|---|---|
| **Overall Size** | 365 mm (L) × 490 mm (W) × 350 mm (H) |
| **Weight** | |
| **Warranty** | Visit: **fienza.com.au/warranty** for more details |
| **WELS Registration** | L08017 |
| **WELS Flow Rating** | 4 Star - 4.6L/3L (3.3L avg/flush) |

## Product/Installation Notes

For ceramic products, please allow +/- 10mm tolerance for manufacturing variances.

We aim to ensure that specifications are correct at the time of publication. All measurements are shown in millimetres. Always use measurements of actual product received for final specification as the technical drawing may contain differences. Please note this product may have a visible printed FIENZA or Watermark logo. Due to printing limitations, physical colour may vary from the image shown. FIENZA reserves the right to make modifications without prior notice.