fienza

STELLA CARE WALL BASIN WITH SHROUD - NO TAP HOLE

Code	RB379S-0
Colour	Gloss White
Material	Vitreous China
Install Type	Wall Hung

Details

- Can be installed to comply with AS1428.1
- Gloss white finish
- Vitreous china
- No tap hole with overflow
- Requires 32mm waste with overflow (not included)
- Wall mounting bolts included

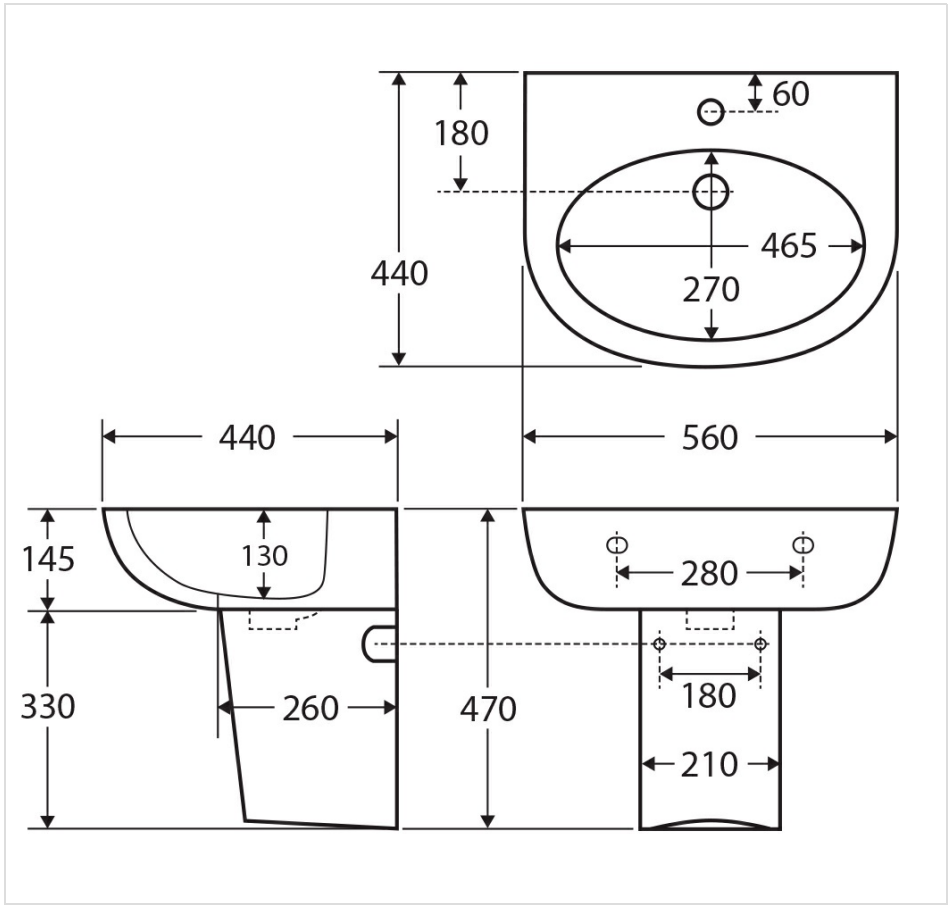



Product/Installation Notes

Requires waste - available separately.

Specifications

Overall Size	560 mm (L) × 440 mm (W) × 750 mm (H)
Weight	24 kg
Warranty	Visit: **fienza.com.au/warranty** for more details
WELS Registration	N/A
WELS Flow Rating	N/A

We aim to ensure that specifications are correct at the time of publication. All measurements are shown in millimetres. Always use measurements of actual product received for final specification as the technical drawing may contain differences. Please note this product may have a visible printed FIENZA or Watermark logo. Due to printing limitations, physical colour may vary from the image shown. FIENZA reserves the right to make modifications without prior notice.